版次	ECN 编码	描述		设计/日期
1	EL2405XXXX	初版发行		江蒙_2024/05/27
		改前	改后	

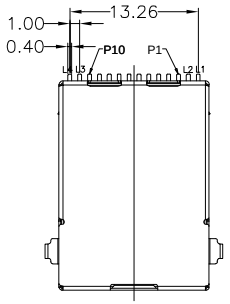

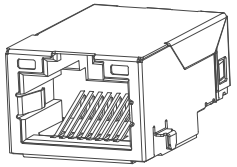

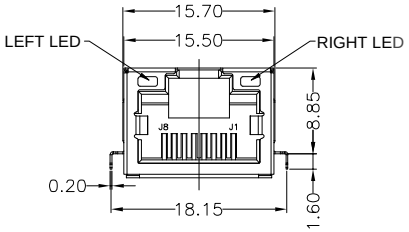

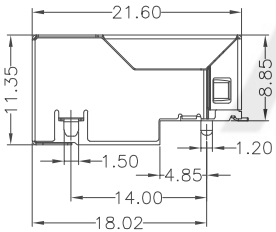

SCHEMATIC FOR RJ45:

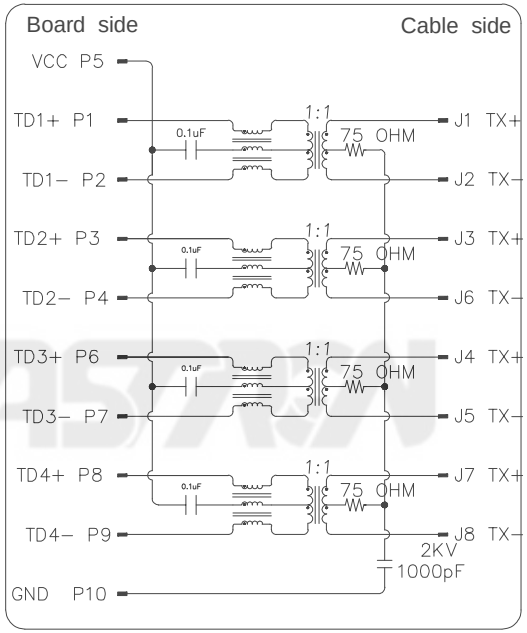

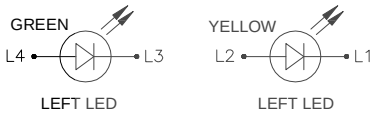

Emitting Color	λp (nm)	Vf@If=20mA	Ir @Vr=5V
Green	565	1.7V~2.6V	10uA max
Yellow	590	1.7V~2.6V	10uA max

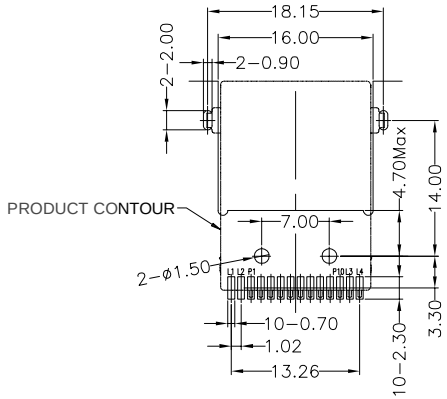

RECOMMENDED PCB LAYOUT

TOLERANCE TABLE		SCALE 2.5:1	DRAWN 江蒙	DATE 2024/05/27	DWG. NO. 600-0000-2451	TITLE RJ45 IMC，1000BASE-T，W/LED CUSTOMER DRAWING	REV. 1
X. ± 0.30	X.° ± 3°	UNIT mm	CHECK 李晨涛	DATE 2024/05/27	PARTS NO.(INTENDED USE) JAAAAXAXDDXH		SHEET 1/2
.X ± 0.25	.X° ± 2°	SIZE A4	APPROVE 朱宁静	DATE 2024/05/27			
.XX ± 0.20							

SPECIFICATIONS :

1. MATERIAL
-HOUSING : HIGH TEMPERATURE THERMOPLASTIC,UL94V-0. BLACK,HSF
-MODULE CASE : HIGH TEMPERATURE THERMOPLASTIC,UL94V-0 ，BLACK,HSF
-RJ CONTACTS : PHOSPHOR BRONZE
PLATING : SELECT GOLD ON CONTACT AREA (SEE PART NO),
100u" MIN TIN PLATING ON SOLDER TAILS, 30u" MIN NICKEL OVERALL
-SOLDER TAIL TERMINAL : BRASS
PLATING: 100u" TIN MIN OVER 30u" MIN NICKEL OVERALL
-SHIELD : BRASS, THICKNESS=0.2mm
PLATING : 30u" MIN NICKEL OVERALL

2.RJ45 SPECIFICATIONS
-INSULATION RESISTANCE : 500 MOHMS MIN
-INSERTION FORCE WITH THE LATCH DEPRESSED :22N MAX
-REMOVAL FORCE WITH THE LATCH DEPRESSED :44N MAX
-DURABILITY :750 CYCLES

3.OPERATING AND STORACE TEMPERATURE
-OPERATING TEMPERATURE:-40° C TO +85°C
-STORAGE TEMPERATURE:-40°C TO +85°C

4.TEMPERATURE CONDITION OF REFLOW SOLDERING:

Contents	Soldering Condition
A:Increasing	3±1° C/SEC
B:Pre-heat starting speed	150° C
C:Pre-heat ending speed	180° C
D:Pre-heat interval	120 sec or over
E:Over 217° C time	60~150 sec
F:Peak Temperature	245° C max
G:Ramp down rate	6° C/sec max

Note:
Type of lead-free solder should be 96.5Sn-3.0Ag-0.5Cu or 99.3Sn-0.7Cu.

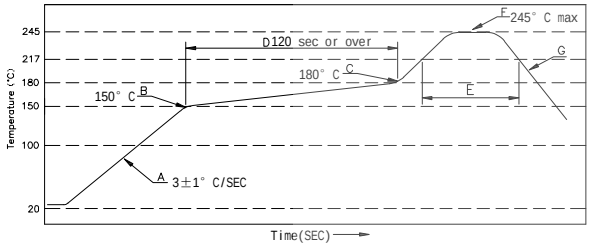

ELECTRICAL CHARACTERISTICS:

1.INSERTION LOSS :
-1~100 MHz -1.0dB MAX.

2.RETURN LOSS(LOAD 100Ω)
-1~30 MHz -18d8 MIN
-30-50 MHz -18dB MIN
-60~80 MHz -12dB MIN
-80~100 MHz -10dB MIN

3. COMNON MODE REJECTION
-1~100 MHz -30dB MIN

4.CROSS TALK
-1~100 MHz -30 dB MIN

5.INDUCTANCE @ 100KHz,0.1V, 8mA DC BIAS
- (P1-P2),(P3-P4),(P6-P7),(P8-P9):350 uH MIN

6.HI-POT TEST
- PCB SIDE TO CABLE SIDE:1500VAC 60S OR 2250VDC 60S

7.TURNS RATION 100KHz
-(P1-P2) : (J1-J2) = 1:1 ±%5
-(P3-P4) : (J3-J6) = 1:1 ±%5
-(P6-P7) : (J4-J5) = 1:1 ±%5
-(P8-P9) : (J7-J8) = 1:1 ±%5

JAAAAXAXDDXH
- A:RJ 45
- A:有线圈
- A:LED+屏蔽壳
- H:TRAY
- A:Gold Flash
- D:3u"
- F:6u"
- H:15u"
- L:30u"
- M:50u"
- D:半金锡

PLASTRON	TOLERANCE TABLE		SCALE 1:1	DRAWN	江蒙	DATE	2024/05/27	DWG. NO. 600-0000-2451	TITLE RJ45 IMC，1000BASE-T，W/LED CUSTOMER DRAWING	REV. 1
	X. ± 0.30	X.° ± 3°	UNIT mm	CHECK	李晨涛	DATE	2024/05/27	PARTS NO.(INTENDED USE) JAAAAXAXDDXH		SHEET 2/2
	.X ± 0.25	.X° ± 2°	SIZE A4	APPROVE	朱宁静	DATE	2024/05/27			
	.XX ± 0.20									